HANGZHOU LIAONA SANITARY CO. LTD
Xingwei village, Guali town, Xiaoshan district, Hangzhou city,
Zhejiang province, China 311247

e-mail: export@erlit.su, www.erlit.su, liaonasanitary.com

ERLIT®

PRODUCT CATALOGUE

ABOUT TM

At all times, taking a shower was not only the mean of hygiene, but also a pleasure, because water has calming and relaxing properties.

TM ERLIT was established in 2006 in order to offer our customers the product, which can give comfort and pleasure during taking typical shower.

Due to high quality and performance of its functional equipment, ERLIT shower cabins will help to charge yourself with vivacity before the working day as well as to de-stress in its end. Despite the fact that ERLIT products are sold in an appropriate price they are completed with numerous useful functions such as different kinds of hydro massage, FM radio, rain shower and some kinds of lightening.

We use only ecologically clear materials and components according to global standards, which provides long-term and reliable operation.

ERLIT product range consists of wide range of models: every customer can choose exactly what can satisfy his needs in creating a comfort in the bathroom.

CONTENTS

ERLIT SPECIFIC FEATURES

– ERLIT TRAYS
– SHOCK RESISTANT GLASS
– INSTALLATION WITHOUT SEALANT USAGE
– EASY AND CLEAR INSTALLATION
– DOUBLE FRAME MOUNTING SYSTEM
– INSTALLATION FROM THE INSIDE

PAGE 2

COMFORT

GOOD CHOICE FOR THOSE WHO LIKES COMBINATION OF USEFULNESS AND COMFORT

PAGE 10

ELEGANCE

GREAT CHOICE FOR PEOPLE WHO APPRECIATES SIMPLICITY, GRACE AND EXQUISITENESS

PAGE 30

PREMIUM

CHOICE FOR PEOPLE WHO LOVES FREEDOM, COMFORT AND FOLLOWS LATEST TRENDS IN DESIGN

PAGE 40

ERLIT TRAYS – COMFORTABLE, SOLID, RELIABLE!

ERLIT trays are assembling constructions:

1. Visible part of tray consists of ABS molding sheet and reinforced (strengthened) with special polymeric composition from the reverse side. During the production of ERLIT trays reinforcing layers goes through polishing. Smooth surface of reinforced layer will save hands from wounds and cuts during shower room installation.

2. Frame of the tray is manufactured from galvanized stable steel sheets. It has all necessary preinstalled fastening sets for installation and special legs to adjust the shower room height.

3. Screen is manufactured from the same material as the tray itself. It has stiffening plate, which gives special resistance. It maintains decorative function – close the space under the tray.

Due to modern materials ERLIT trays have range of important consumer properties:

1. Resistant to mechanical and chemical damages.
2. Has smooth, but not slippery surface.
3. Has clear and deep color, good shine.
4. Prevent bacterial growth.
5. Simple in maintenance.

ERLIT

ERLIT SPECIFIC FEATURES:
trays

PROTECTION FROM UNPLEASANT SMELLS

Siphon trap with hydraulic hitch, which will prevent occurrence of unpleasant smell from drain system

PROTECTION FROM WATER SPLASHES ON THE FLOOR

High ledge of 15 mm on perimeter and drain holes prevent water splashes on the floor of room.

PROTECTION OF DRAINER FROM CHOKING

Siphon trap with extracted container

IT'S CONVENIENT TO TAKE IN WATER AND DISCHARGE IT FROM THE TRAY

Siphon trap with stopper plug, which let to open and close drainage hole by foot pressing.

OVERFLOW PROTECTION

Special drain hole prevents the water overflow over the tray ledge during the water filling.

PROTECTION FROM BATHTUB OVERFLOW

Pouring of bathtub with protection from water overflow

SHOCK RESISTANT GLASS – SAFETY GUARANTY.

We use only thermally hardened glass for manufacturing ERLIT shower rooms.
Thermally hardened glass is the glass, exposed to heating up till high temperature, accompanied by quick cooling. Such hardening makes glass very solid, it is impossible to brake it with expedient means (except metallic tools). As well as high durability and resistance to different influence, its safety can be also classified like advantage.

ADVANTAGES OF THERMALLY HARDENED GLASS.

1. High shock resistance.
2. Ensure safety even in the cases of breakage: it is broken into a lot of small pieces, which cannot bring serious harm to a man.
3. Abrasion resistance: do not lose its properties during long years of service.

THICKNESS OF SHOWER ROOM GLASSES VARIES FROM 4 TO 6 MM, DEPENDING ON THE MODEL.

ERLIT PREMIUM

ERLIT ELEGANCE

ERLIT COMFORT

ERLIT GLASSES ARE REGULARLY TESTED AND MEET ALL THE EUROPEAN AND GLOBAL STANDARDS.

SEVERAL TYPES OF GLASS ARE USED IN ERLIT SHOWER ROOMS: FROSTED, TONED, TRANSPARENT AND GLASS WITH DÉCOR.

Frosted and toned glasses are used in models of ERLIT Comfort collection.

ICE glass and glass with stylish décor are used in models of ERLIT Elegance collection.

Transparent glass and glass with décor are used in models of ERLIT Premium collection.

Technological process used for décor delineation on the ERLIT glasses is called chemical milling. It involves exposure of chemical reagent with the glass in order to make modern and absolutely safe composition. Glass treated by this process has less undulation and a specific «silky» surface.

Manufacturing of ERLIT shower rooms begins from the selection of superior components and materials. Before usage in manufacturing all the components pass double quality inspection which means that only quality hardware is used in ERLIT shower rooms.

COMPONENTS OF HIGH QUALITY AND MODERATE PRICE – THIS IS A SUCCESS FORMULA OF ERLIT GOODS!

ALUMINUM PROFILE

Aluminum profile has protective anodized coating, due to which own high corrosion-resisting properties.

WATER FAUCET

Body of water faucet is made of latten brass, cartridges are ceramic which makes water faucet much more reliable.

MAGNETIC TAPE

Tightly fix glass doors in closed position, preventing water splashes on the floor and doors.

DOOR ROLLERS

Outfitted with closed stainless steel bearing. Provide reliable and noiseless operation of the doors.

JETS

Self-cleaning, at the input have cone-shaped net, with the regulation of overspray angle.

At the factory hollow silicone sealant is installed on the sidewall of the glass back walls which allows to use hermetic only during the installation of water mixer and siphon tube.

INSTALLATION WITHOUT SEALANT USAGE – EVIDENT ADVANTAGES!

INSTALLATION WITHOUT SEALANT USAGE:

1 HIGH LEVEL OF ERLIT SHOWER ROOM'S TIGHTNESS

Silicone sealant installed on the sidewall of back walls tighten places of connection between the details which prevents water from weeping on the floor and walls in the bathroom.

2 PLAIN INSTALLATION, SAVING OF TIME

Back walls with silicone sealant are assembled with aluminum profile at the factory so there is no need to treat shower room with sealant again. It simplifies installation process and reduces time of assembling and installation of shower room.

3 SIMPLICITY OF MAINTENANCE

In terms of high humidity in bathroom there appear some mildrew and fungus on the silicone parts. Such silicone cannot be cleaned. The only way to refresh join is to remove entirely old silicone and carefully clean the join from small waste parts. Due to special sealants, maintenance for ERLIT shower rooms became much easier.

4 GOOD-LOOKING APPEARANCE OF SHOWER ROOMS

Absence of necessity to tighten additionally ERLIT shower rooms with silicone sealer, which in terms of high humidity will loose sooner or later their functional and esthetic qualities.

5 HIGH LEVEL OF HYGIENE

Absence of big quantity of hermetic in ERLIT shower rooms reduces risks of fungus, bacterial and mildew growth, which unfailingly will appear in joints and connections, handled with hermetic.

Installation without sealant usage is used in models: ERLIT Comfort (35, 45 lines), ERLIT Elegance, ERLIT Premium

ERLIT SPECIFIC FEATURES:
easy and clear installation

Installation of ERLIT shower room is intuitively understandable, logical and available for everyone, including those, who installs shower room for the first time in life.

ERLIT INSTALLATION: AS EASY AS A-B-C!

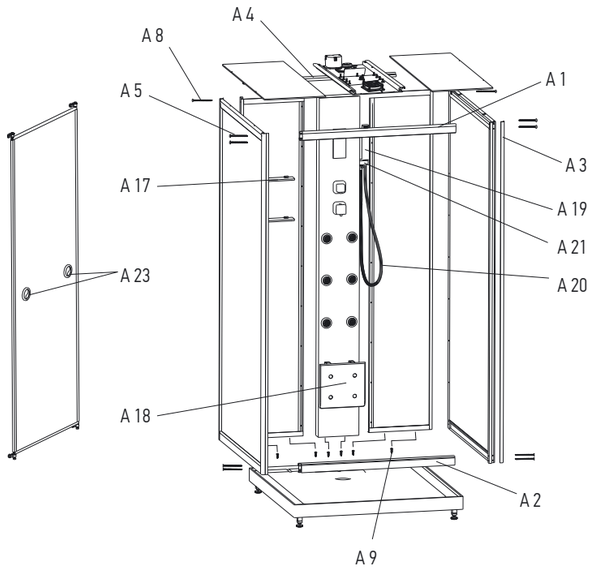

INTUITIVELY UNDERSTANDABLE INSTALLATION.
ALL YOU NEED IS TO READ MANUAL BOOK ATTENTIVELY!

1. Clear instructions provide detailed description of the installation process.
2. All fastening parts are supplied in individual packing. All the details are packed in parcels which are signed.
3. Highly-accurate adjustment of all details at the factory provides its excellent connectability.
4. We use fastening details instead of bolts and nuts in order to reduce the necessity of drilling and make installation process much easier.
5. Cords of control panel are marked with different colors – it will help to avoid mistakes during plugging of electric part.
6. Symmetrical glasses – it is impossible to mix left and right doors or to install something incorrectly.
7. We use universal details for every product line in order to make the changing of inner details easier.

ERLIT SPECIFIC FEATURES:
double frame mounting system

Compared to shower room, installation of shower enclosures needs increased demands to the apartment: wall and floor surface should be smoothed, angles should be of 90 degrees. Only in this case installation of high quality is possible for the majority of shower enclosures.
That's why during manufacturing process of ERLIT shower enclosures we make sure that the installation process was easy and does not demand long preparing works.

ERLIT DOUBLE FRAME SYSTEM WILL FACILITATE TASK.

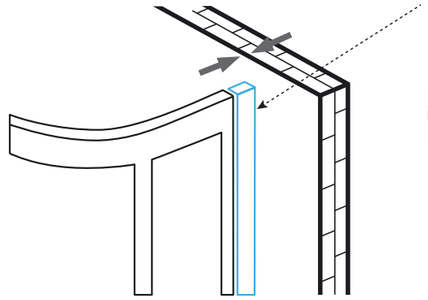

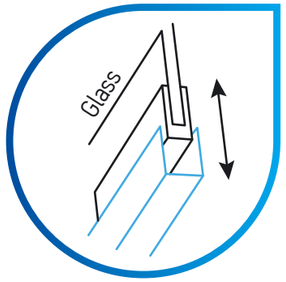

DOUBLE FRAME

WALL AT AN ANGLE

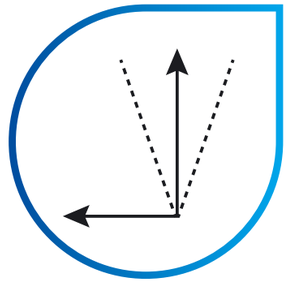

DOUBLE FRAME FASTENING SYSTEM OF FRAME TO THE WALL LET YOU TO INSTALL ERLIT SHOWER ENCLOSURES IN APATMENTS WITH «BUNGLED WALLS»
*when the angle between wall and floor more than 90 degrees.

Double frame system of fastening is used in models: ERLIT Comfort (shower enclosures 05 line)

ERLIT SPECIFIC FEATURES:
inner assembly

As a rule, installation of shower boxes happen in terms of bathroom limited space.
The problem is that majority of shower boxes are mounted from the inner side, it complicates the process of installation and switching, and sometimes even makes impossible the installation of shower box in bathroom.
Also further service of such box is very difficult: there are installed toilet bowl, sink and washing machine in the bathroom, which do not let to move shower box for its fixing.

ERLIT SHOWER BOXES – BEST DECISION IN TERMS OF LIMITED SPACE.

INNER ASSEMBLY

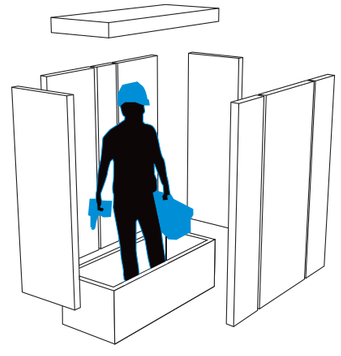

BEST DECISION

IN TERMS OF DESIGN ERLIT SHOWER BOXES ARE CONSTRUCTED IN SUCH WAY THAT YOU CAN INSTALL IT FROM THE INSIDE.

In addition there is no need to leave splits between box and wall so you can use bathroom space to the full. Central shower stand can be easily installed or removed inside the box so all communications lines can be easily serviced and fixed.

Inside installation is used in models: ERLIT Comfort (shower boxes of 4515 and 4517 line)

ERLIT

Comfort

**Shower rooms of Comfort line –
good choice for those, who likes
combination of usefulness and comfort.**

**Different range of models in this line
gives you an opportunity to make choice,
which will be suit best of all for space
organization in your bathroom.**

**It would be much more comfortable
and pleasant to take a shower now,
due to the usage of quality materials,
accessories and essential functionality.**

Choice for the whole family

- HANDSHOWER
- RAIN SHOWER
- BACK HYDROMASSAGE
- CONTROL PANEL
- FM RADIO
- FAN
- TOP LIGTENING
- MOON LIGHT IN THE MIDDLE PANEL
- CHROMOTHERAPY

Wide model range
Essential functionality
Glass thickness 4 mm
Tray max load - 210 kg
Frosted or toned glass

ERLIT

Comfort

ER 0508T
ER 0509T
ER 0510T C4

4MM

EASY INSTALLATION

DOUBLE FRAME

C4 GLASS TONED

COMMON CHARACTERISTIC

TYPE	ENCLOSURE
SHAPE	QUARTER ROUND
ROOF	NO
TRAY	HIGH
BACK WALL	NO
MIDDLE PANEL	NO

ER 0508T
ER 0509T
ER 0510T C3

C3 GLASS FROSTED

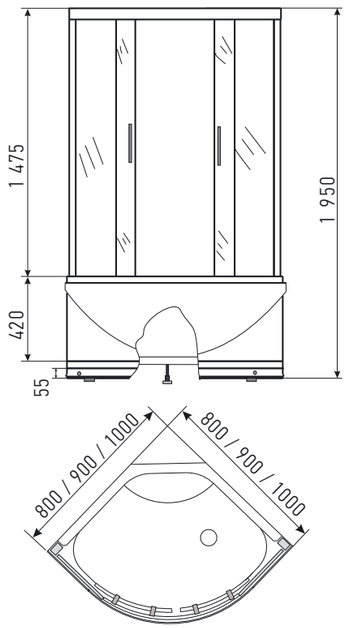

ERLIT

Comfort

ER 0508
ER 0509
ER 0510 C4

4MM

EASY INSTALLATION

DOUBLE FRAME

C4 GLASS TONED

COMMON CHARACTERISTIC

TYPE	ENCLOSURE
SHAPE	QUARTER ROUND
ROOF	NO
TRAY	LOW
BACK WALL	NO
MIDDLE PANEL	NO

ER 0508
ER 0509
ER 0510 C3

C3 GLASS FROSTED

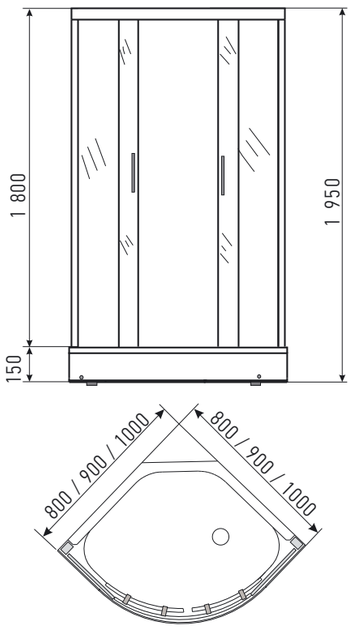

ERLIT

ER 2509TP C4

4MM

EASY INSTALLATION

C4 GLASS TONED BACK WALL WHITE

COMMON CHARACTERISTIC

TYPE	ROOM
SHAPE	QUARTER ROUND
ROOF	AVAILABLE
TRAY	HIGH
BACK WALL	ACRYL
MIDDLE PANEL	AVAILABLE (PLASTIC)

SPECIFICATION

MIRROR / GLASS SHELF

Comfort

ER 2509TP C3

C3 GLASS FROSTED BACK WALL WHITE

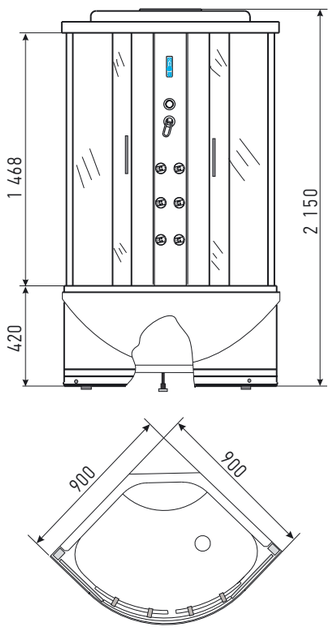

ERLIT

ER 3509P C4

4MM

EASY INSTALLATION

SILICONE

C4 GLASS TONED BACK WALL BLACK

COMMON CHARACTERISTIC

TYPE	ROOM
SHAPE	QUARTER ROUND
ROOF	AVAILABLE
TRAY	LOW
BACK WALL	GLASS
MIDDLE PANEL	AVAILABLE (PLASTIC)

SPECIFICATION

MIRROR / GLASS SHELF

Comfort

ER 3509P C3

C3 GLASS FROSTED BACK WALL WHITE

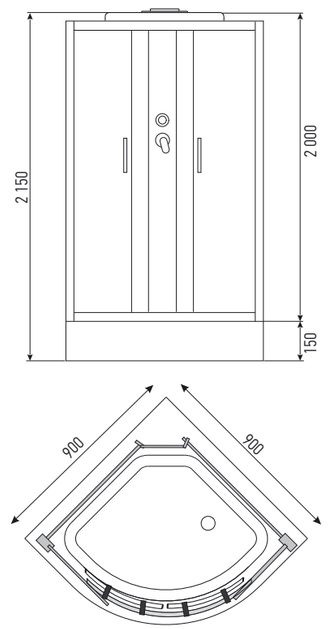

ERLIT

Comfort

ER 3509TP C4

C4 GLASS TONED BACK WALL BLACK

ER 3509TP C3

C3 GLASS FROSTED BACK WALL WHITE

COMMON CHARACTERISTIC

TYPE	ROOM
SHAPE	QUARTER ROUND
ROOF	AVAILABLE
TRAY	HIGH
BACK WALL	GLASS
MIDDLE PANEL	AVAILABLE (PLASTIC)

SPECIFICATION

MIRROR / GLASS SHELF

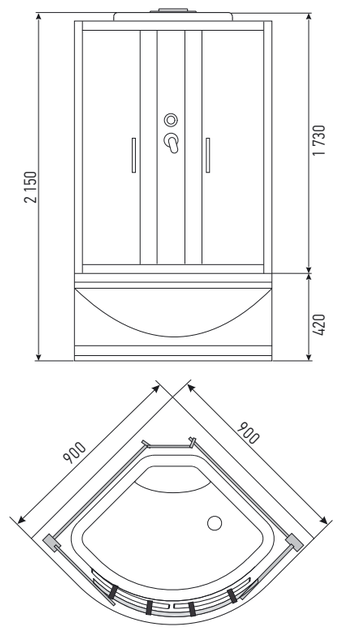

ERLIT

Comfort

ER 3509PF C4

C4 GLASS TONED BACK WALL BLACK

ER 3509PF C3

C3 GLASS FROSTED BACK WALL WHITE

COMMON CHARACTERISTIC

TYPE	ROOM
SHAPE	QUARTER ROUND
ROOF	AVAILABLE
TRAY	HIGH
BACK WALL	GLASS
MIDDLE PANEL	AVAILABLE (PLASTIC)

SPECIFICATION

MIRROR / GLASS SHELF

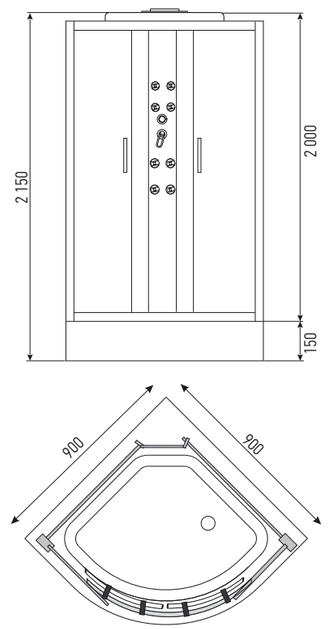

ERLIT

Comfort

ER 3509TPF C4

4MM

EASY INSTALLATION

SILICONE

C4 GLASS TONED BACK WALL BLACK

COMMON CHARACTERISTIC

TYPE	ROOM
SHAPE	QUARTER ROUND
ROOF	AVAILABLE
TRAY	HIGH
BACK WALL	GLASS
MIDDLE PANEL	AVAILABLE (PLASTIC)

SPECIFICATION

MIRROR / GLASS SHELF

ER 3509TPF C3

C3 GLASS FROSTED BACK WALL WHITE

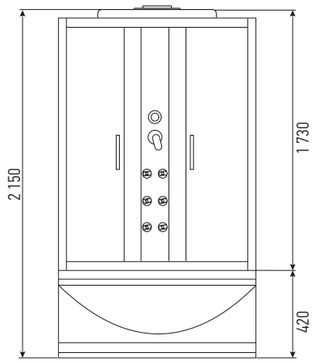

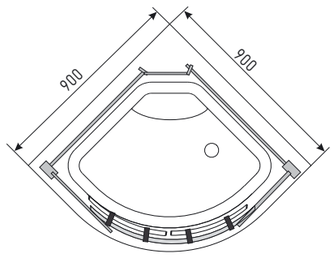

ERLIT

Comfort

ER 3512TPL C4
ER 3512TPR C4

R/L

RIGHT SIDED / LEFT SIDED SHOWER ROOM DIRECTION SHOULD BE DEFINED BY CENTRAL PLASTIC STAND POSITION

4MM

EASY INSTALLATION

SILICONE

C4 GLASS TONED BACK WALL BLACK

COMMON CHARACTERISTIC

TYPE	ROOM
SHAPE	ASYMMETRICAL
ROOF	AVAILABLE
TRAY	HIGH
BACK WALL	GLASS
MIDDLE PANEL	AVAILABLE (PLASTIC)

SPECIFICATION

MIRROR / GLASS SHELF / RAILS FOR SHOWER HEAD

ER 3512TPL C3
ER 3512TPR C3

C3 GLASS FROSTED BACK WALL WHITE

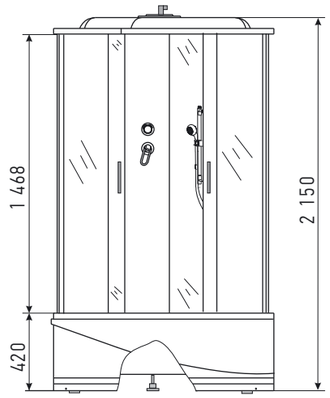

R RIGHT SIDED

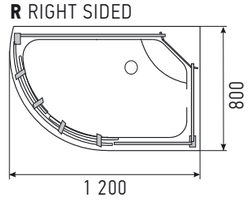

L LEFT SIDED

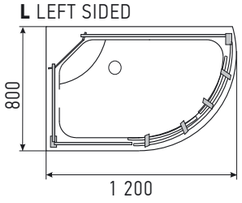

ERLIT

Comfort

ER 3512PL C4
ER 3512PR

R/L

RIGHT SIDED / LEFT SIDED
SHOWER ROOM DIRECTION SHOULD BE DEFINED BY CENTRAL PLASTIC STAND POSITION

4MM

EASY INSTALLATION

SILICONE

C4 GLASS TONED BACK WALL BLACK

COMMON CHARACTERISTIC

TYPE	ROOM
SHAPE	ASYMMETRICAL
ROOF	AVAILABLE
TRAY	LOW
BACK WALL	GLASS
MIDDLE PANEL	AVAILABLE (PLASTIC)

* front glass – 5 mm

SPECIFICATION

MIRROR / GLASS SHELF / RAILS FOR SHOWER HEAD

ER 3512PL C3
ER 3512PR

C3 GLASS FROSTED BACK WALL WHITE

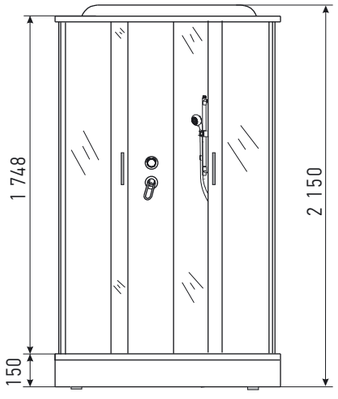

R RIGHT SIDED

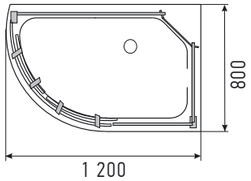

L LEFT SIDED

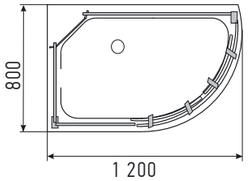

ERLIT

Comfort

ER 3512TPFL C4
ER 3512TPFR

R/L

RIGHT SIDED / LEFT SIDED
SHOWER ROOM DIRECTION SHOULD BE DEFINED BY CENTRAL PLASTIC STAND POSITION

4MM

EASY INSTALLATION

SILICONE

C4 GLASS TONED BACK WALL BLACK

COMMON CHARACTERISTIC

TYPE	ROOM
SHAPE	ASYMMETRICAL
ROOF	AVAILABLE
TRAY	HIGH
BACK WALL	GLASS
MIDDLE PANEL	AVAILABLE (PLASTIC)

SPECIFICATION

MIRROR / GLASS SHELF / RAILS FOR SHOWER HEAD

ER 3512TPFL C3
ER 3512TPFR

C3 GLASS FROSTED BACK WALL WHITE

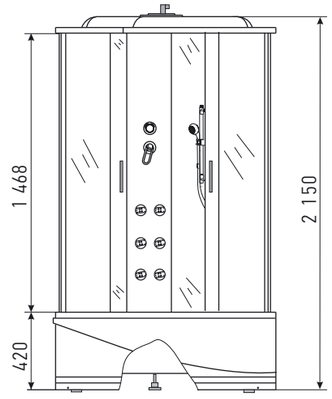

R RIGHT SIDED

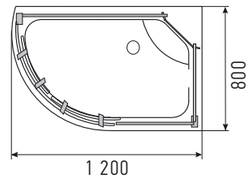

L LEFT SIDED

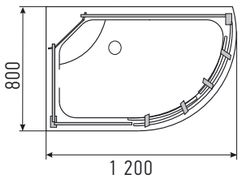

ERLIT

Comfort

ER 3512PFL
ER 3512PFR C4

R/L

RIGHT SIDED / LEFT SIDED
SHOWER ROOM DIRECTION SHOULD BE DEFINED BY CENTRAL PLASTIC STAND POSITION

4MM

EASY INSTALLATION

SILICONE

C4 GLASS TONED BACK WALL BLACK

COMMON CHARACTERISTIC

TYPE	ROOM
SHAPE	ASYMMETRICAL
ROOF	AVAILABLE
TRAY	LOW
BACK WALL	GLASS
MIDDLE PANEL	AVAILABLE (PLASTIC)

* front glass – 5 mm

SPECIFICATION

MIRROR / GLASS SHELF / RAILS FOR SHOWER HEAD

ER 3512PFL
ER 3512PFR C3

C3 GLASS FROSTED BACK WALL WHITE

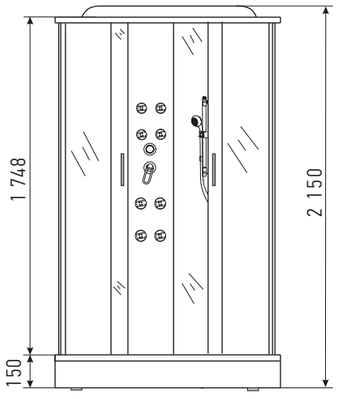

R RIGHT SIDED

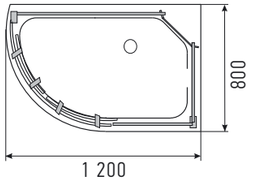

L LEFT SIDED

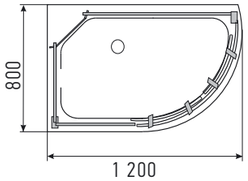

ERLIT

Comfort

ER 4508TP
ER 4509TP
ER 4510TP C4

4MM

EASY INSTALLATION

SILICONE

C4 GLASS TONED BACK WALL BLACK

COMMON CHARACTERISTIC

TYPE	ROOM
SHAPE	QUARTER ROUND
ROOF	AVAILABLE
TRAY	HIGH
BACK WALL	GLASS
MIDDLE PANEL	AVAILABLE (PLASTIC)

SPECIFICATION

MIRROR / GLASS SHELF

MOON LIGHT

FM RADIO

ER 4508TP
ER 4509TP
ER 4510TP C3

C3 GLASS FROSTED BACK WALL WHITE

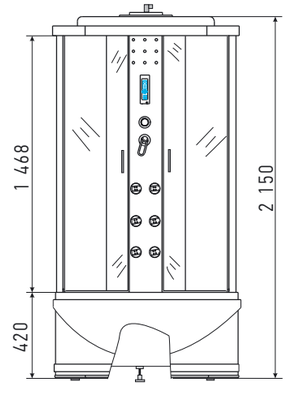

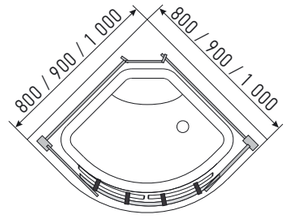

ERLIT

Comfort

ER 4508P
ER 4509P
ER 4510P C4

C4 GLASS TONED
BACK WALL BLACK

COMMON CHARACTERISTIC

TYPE	ROOM
SHAPE	QUARTER ROUND
ROOF	AVAILABLE
TRAY	LOW
BACK WALL	GLASS
MIDDLE PANEL	AVAILABLE (PLASTIC)

SPECIFICATION

MIRROR / GLASS SHELF

MOON LIGHT

FM RADIO

ER 4508P
ER 4509P
ER 4510P C3

C3 GLASS FROSTED
BACK WALL WHITE

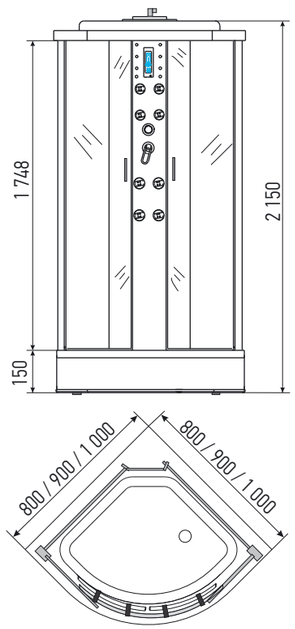

ERLIT

Comfort

ER 4512TPL
ER 4512TPR C4

R/L

RIGHT SIDED / LEFT SIDED SHOWER ROOM DIRECTION SHOULD BE DEFINED BY CENTRAL PLASTIC STAND POSITION

C4 GLASS TONED
BACK WALL BLACK

COMMON CHARACTERISTIC

TYPE	ROOM
SHAPE	ASYMMETRICAL
ROOF	AVAILABLE
TRAY	HIGH
BACK WALL	GLASS
MIDDLE PANEL	AVAILABLE (PLASTIC)

SPECIFICATION

MIRROR / GLASS SHELF / RAILS FOR SHOWER HEAD

MOON LIGHT

FM RADIO

ER 4512TPL
ER 4512TPR C3

C3 GLASS FROSTED
BACK WALL WHITE

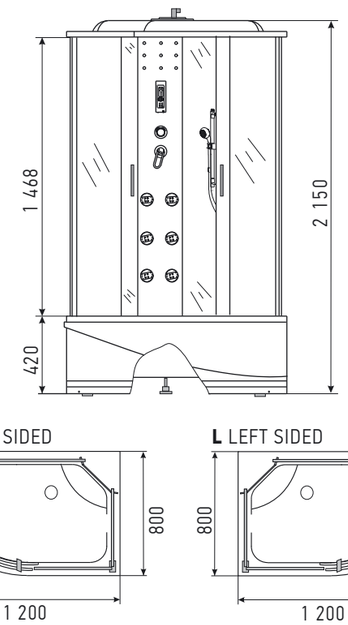

R RIGHT SIDED

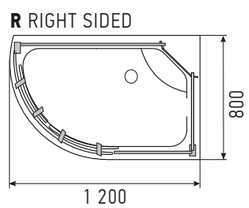

L LEFT SIDED

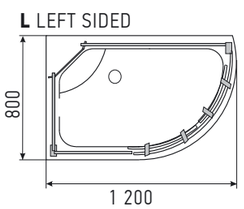

Comfort

ER 4512PL C4
ER 4512PR C4

R/L

RIGHT SIDED / LEFT SIDED
SHOWER ROOM DIRECTION SHOULD BE DEFINED BY CENTRAL PLASTIC STAND POSITION

4MM

EASY INSTALLATION

SILICONE

C4 GLASS TONED BACK WALL BLACK

ER 4512PL C3
ER 4512PR C3

C3 GLASS FROSTED BACK WALL WHITE

COMMON CHARACTERISTIC

TYPE	ROOM
SHAPE	ASYMMETRICAL
ROOF	AVAILABLE
TRAY	LOW
BACK WALL	GLASS
MIDDLE PANEL	AVAILABLE (PLASTIC)

* front glass – 5 mm

SPECIFICATION

MIRROR / GLASS SHELF / RAILS FOR SHOWER HEAD

MOON LIGHT

FM RADIO

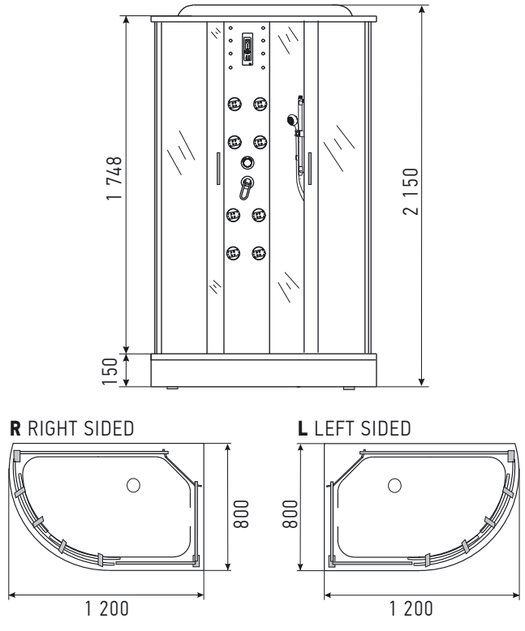

Comfort

ER 4517TP C4
ER 4515TP C4

4MM

EASY INSTALLATION

SILICONE

INSTALLATION INSIDE

C4 GLASS TONED BACK WALL BLACK

ER 4517TP C3
ER 4515TP C3

C3 GLASS FROSTED BACK WALL WHITE

COMMON CHARACTERISTIC

TYPE	BOX
SHAPE	SQUARE SHAPED
ROOF	AVAILABLE
TRAY	HIGH
BACK WALL	GLASS
MIDDLE PANEL	AVAILABLE (PLASTIC)

SPECIFICATION

SITTING / MIRROR / GLASS SHELF / HEAD CUSHION

MOON LIGHT

FM RADIO

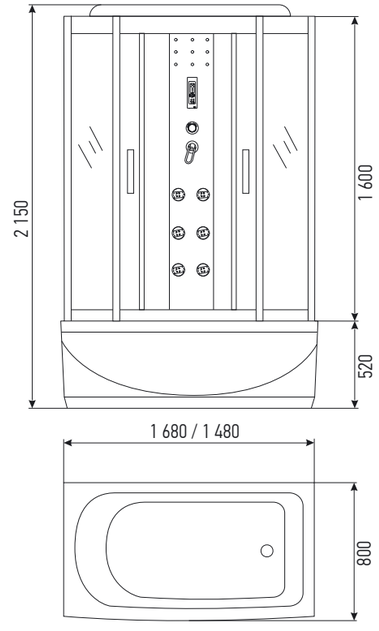

Elegance

Erlit Elegance is a great choice for people who appreciate simplicity, grace and exquisiteness.

Elegant design in combination with essential functionality is the specific feature of Elegance shower rooms.

Due to the usage of white color in framing and individually picked accessories, shower rooms of this line will nicely complete and highlight your bathroom style.

Choice of aesthet

- HANDSHOWER
- RAIN SHOWER
- BACK HYDROMASSAGE
- CONTROL PANEL
- FM RADIO
- BLUETOOTH
- FAN
- TOP LIGTENING

Elegant design
White color in framing and accessories
Essential functionality
Glass thickness - 5 mm
Frosted glass with graceful decor
Tray max load - 210 kg

ERLIT

Elegance

ER 05509 S2

5 MM

EASY INSTALLATION

DOUBLE FRAME

S2 GLASS FROSTED WITH DÉCOR «WAVE»

COMMON CHARACTERISTIC

TYPE	ENCLOSURE
SHAPE	QUARTER ROUND
ROOF	NO
TRAY	LOW
BACK WALL	NO
MIDDLE PANEL	NO

ER 05509 S3

S3 ICE GLASS

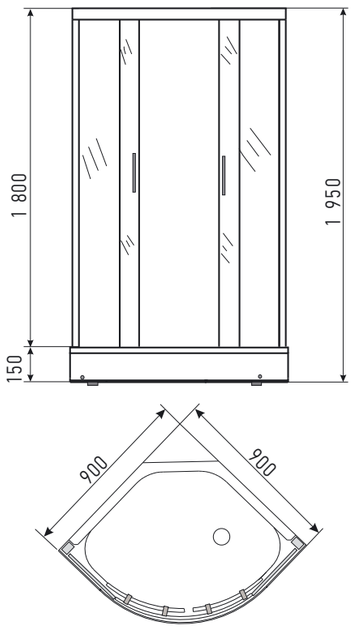

ERLIT

Elegance

ER 05510 S2

5 MM

EASY INSTALLATION

DOUBLE FRAME

S2 GLASS FROSTED WITH DÉCOR «WAVE»

COMMON CHARACTERISTIC

TYPE	ENCLOSURE
SHAPE	QUARTER ROUND
ROOF	NO
TRAY	LOW
BACK WALL	NO
MIDDLE PANEL	NO

ER 05510 S3

S3 ICE GLASS

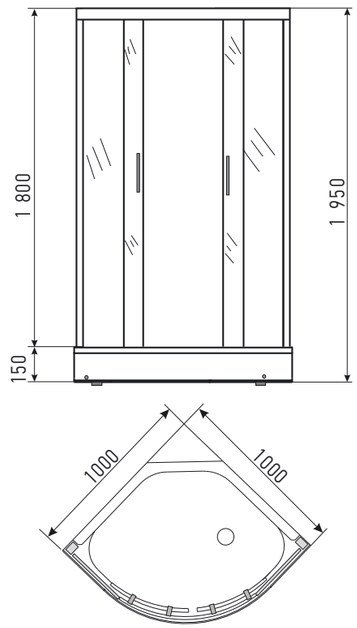

ERLIT

Elegance

ER 5509TP
ER 5510TP S2

S2 GLASS FROSTED WITH DÉCOR «WAVE»

COMMON CHARACTERISTIC

TYPE	ROOM
SHAPE	QUARTER ROUND
ROOF	AVAILABLE
TRAY	HIGH
BACK WALL	GLASS
MIDDLE PANEL	AVAILABLE (PLASTIC)

SPECIFICATION

MIRROR / GLASS SHELF / DISPENSER FOR SOAP /
RAILS FOR SHOWER HEAD / HOOK-HANGER

FM RADIO

Elegance

ER 5509TP
ER 5510TP S3

S3 ICE GLASS

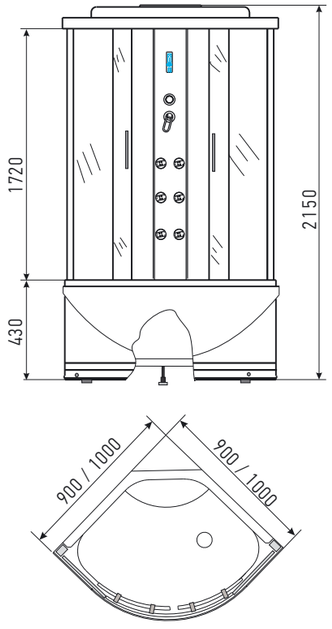

ERLIT

ER 5509P
ER 5510P S2

S2 GLASS FROSTED WITH DÉCOR «WAVE»

COMMON CHARACTERISTIC

TYPE	ROOM
SHAPE	QUARTER ROUND
ROOF	AVAILABLE
TRAY	LOW
BACK WALL	GLASS
MIDDLE PANEL	AVAILABLE (PLASTIC)

SPECIFICATION

MIRROR / GLASS SHELF / DISPENSER FOR SOAP /
RAILS FOR SHOWER HEAD / HOOK-HANGER

FM RADIO

Elegance

ER 5509P
ER 5510P S3

S3 ICE GLASS

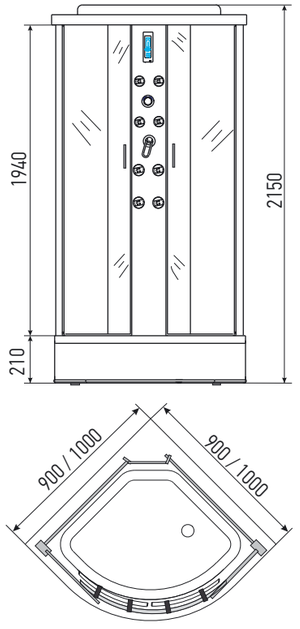

ERLIT

Elegance

ER 5512TPL S2
ER 5512TPR S2

5 MM

EASY INSTALLATION

SILICONE

S2 GLASS FROSTED WITH DÉCOR «WAVE»

COMMON CHARACTERISTIC

TYPE	ROOM
SHAPE	QUARTER ROUND
ROOF	AVAILABLE
TRAY	HIGH
BACK WALL	GLASS
MIDDLE PANEL	AVAILABLE (PLASTIC)

SPECIFICATION

MIRROR / GLASS SHELF / DISPENSER FOR SOAP /
RAILS FOR SHOWER HEAD / HOOK-HANGER

ER 5512TPL S3
ER 5512TPR S3

S3 ICE GLASS

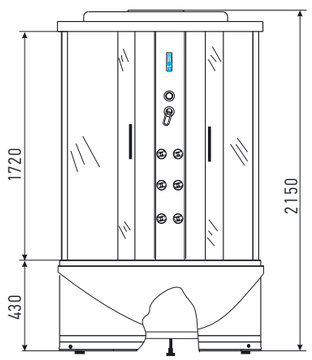

R RIGHT SIDED

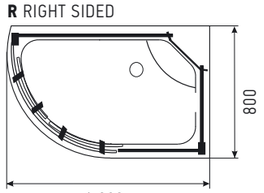

L LEFT SIDED

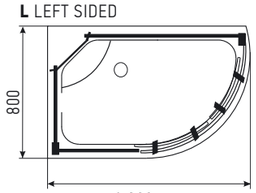

ERLIT

Elegance

ER 5512PL S2
ER 5512PR S2

5 MM

EASY INSTALLATION

SILICONE

S2 GLASS FROSTED WITH DÉCOR «WAVE»

COMMON CHARACTERISTIC

TYPE	ROOM
SHAPE	QUARTER ROUND
ROOF	AVAILABLE
TRAY	LOW
BACK WALL	GLASS
MIDDLE PANEL	AVAILABLE (PLASTIC)

SPECIFICATION

MIRROR / GLASS SHELF / DISPENSER FOR SOAP /
RAILS FOR SHOWER HEAD / HOOK-HANGER

ER 5512PL S3
ER 5512PR S3

S3 ICE GLASS

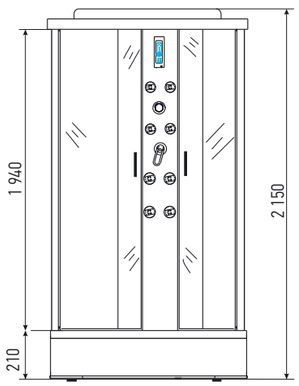

R RIGHT SIDED

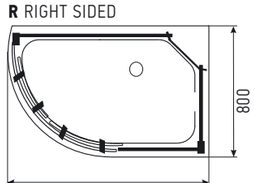

L LEFT SIDED

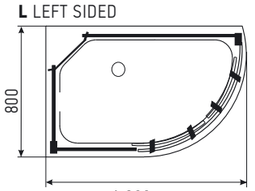

PREMIUM

Erlit Premium – choice of people, who loves freedom, comfort and follows last trends in design.

Shower rooms are fully made of crashworthy glass, do not charge space of bathroom. Doors open inside due to special roller system, effectively creating additional comfort.

Stylish appearance and modern functionality of Erlit Premium shower rooms line will become optimum addition to the bathroom.

Choice of successful people

- HANDSHOWER
- RAIN SHOWER
- BACK HYDROMASSAGE
- CONTROL PANEL
- FM RADIO
- BLUETOOTH
- FAN
- TOP LIGTENING
- AUTOMATIC ON/ OFF LIGHT SWITCH
- CHROMOTHERAPY
- OZONIZING SYSTEM

Stylish European design
Modern functionality
Inside door opening
Glass thickness - 6 mm
Tray max load - 250 kg
Frame sitting max load - 120 kg
Transparent glass or glass with decor

ERLIT

PREMIUM

ER MIA90 ER MIA100 W1

6 MM

EASY INSTALLATION

SILICONE

W1 TRANSPARENT GLASS

COMMON CHARACTERISTIC

TYPE	ROOM
SHAPE	SQUARE SHAPED
ROOF	AVAILABLE
TRAY	LOW
BACK WALL	GLASS
MIDDLE PANEL	NO

SPECIFICATION

GLASS SHELF / HOOK-HANGER

PREMIUM

ER MIA90 ER MIA100 W2

W2 GLASS WITH DÉCOR «FLOWER»

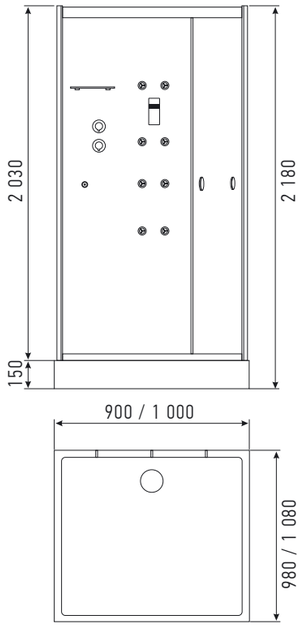

ERLIT

ER NYC100 W1

6 MM

EASY INSTALLATION

SILICONE

W1 TRANSPARENT GLASS

COMMON CHARACTERISTIC

TYPE	ROOM
SHAPE	SQUARE SHAPED
ROOF	AVAILABLE
TRAY	LOW
BACK WALL	GLASS
MIDDLE PANEL	AVAILABLE (ALUMINIUM)

SPECIFICATION

SITTING / GLASS SHELF / HOOK-HANGER

PREMIUM

ER NYC100 W2

W2 GLASS WITH DÉCOR «FLOWER»

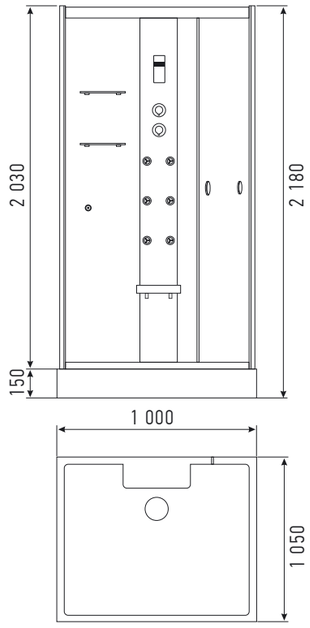

ERLIT

PREMIUM

ER NYC120L / ER NYC120R W1

R/L

RIGHT SIDED / LEFT SIDED SHOWER ROOM DIRECTION SHOULD BE DEFINED BY THE GLASS SLIDING DOOR POSITION

6MM

EASY INSTALLATION

SILICONE

W1 TRANSPARENT GLASS

ER NYC120L / ER NYC120R W2

W2 GLASS WITH DÉCOR «FLOWER»

COMMON CHARACTERISTIC

TYPE	ROOM
SHAPE	SQUARE SHAPED
ROOF	AVAILABLE
TRAY	LOW
BACK WALL	GLASS
MIDDLE PANEL	AVAILABLE (ALUMINIUM)

SPECIFICATION

SITTING / GLASS SLIDING DOOR / HOOKS-HANGER

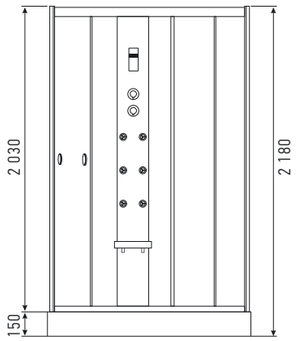

R RIGHT SIDED

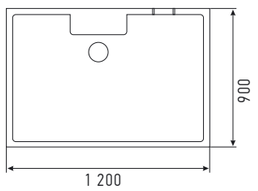

L LEFT SIDED

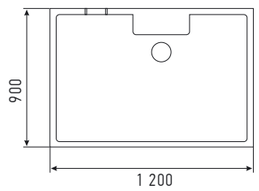

ERLIT

PREMIUM

ER SYD150 / ER SYD170 W1

6MM

EASY INSTALLATION

SILICONE

W1 TRANSPARENT GLASS

ER SYD150 / ER SYD170 W2

W2 GLASS WITH DÉCOR «FLOWER»

COMMON CHARACTERISTIC

TYPE	BOX
SHAPE	SQUARE SHAPED
ROOF	AVAILABLE
TRAY	HIGH
BACK WALL	GLASS
MIDDLE PANEL	AVAILABLE (ALUMINIUM)

SPECIFICATION

SITTING / GLASS SHELF / HOOKS-HANGER / RAILS FOR SHOWER HEAD

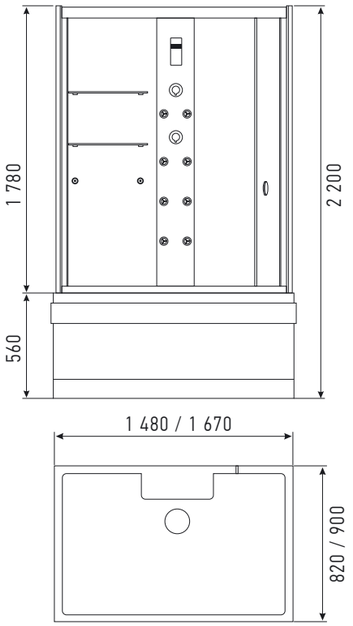

	Common characteristic														Glass				Functional abilities														Speci cation									Dimensions	
	Type			Shape				Tray		Back wall		Middle panel																																
	Room	Box	Enclosure	Quarter round	Asymmetrical	Square shaped	Roof	Low	High	Acryl	Glass	Plastic	Glass	Aluminium	Toned	Frosted	Transparent	With Décor	Rain shower	Handshower	Back hydromassage	Feet hydromassage	Steam generator	Top ligtening	Moon light in the middle panel	Automatic on/off light switch	Control panel	FM radio	Bluetooth	Fan	Chromotherapy	Ozonizing system	Mirror	Glasss shelf	Dispenser for soap	Hand-rail	Sitting	Glass sliding door	Head cushion	Hook-hanger	Rails for shower head	mm	Height of tray, mm.
	ERLIT Comfort																																										
ER 0510T-C3			•	•					•							•																										1 000 x 1 000 x 1 950	420
ER 0510T-C4			•	•					•						•																											1 000 x 1 000 x 1 950	420
ER 0509T-C3			•	•					•							•																										900 x 900 x 1 950	420
ER 0509T-C4			•	•					•						•																											900 x 900 x 1 950	420
ER 0508T-C3			•	•					•							•																										800 x 800 x 1 950	420
ER 0508T-C4			•	•					•						•																											800 x 800 x 1 950	420
ER 0510-C3			•	•				•								•																										1 000 x 1 000 x 1 950	150
ER 0510-C4			•	•				•								•																										1 000 x 1 000 x 1 950	150
ER 0509-C3			•	•				•								•																										900 x 900 x 1 950	150
ER 0509-C4			•	•				•							•																											900 x 900 x 1 950	150
ER 0508-C3			•	•				•								•																										800 x 800 x 1 950	150
ER 0508-C4			•	•				•							•																											800 x 800 x 1 950	150
ER 2509TP-C3	•			•			•		•	•		•				•			•	•	•			•			•			•		•	•									900 x 900 x 2 150	420
ER 2509TP-C4	•			•			•		•	•		•			•				•	•	•			•			•			•		•	•									900 x 900 x 2 150	420
ER 3509TP-C3	•			•			•		•		•	•				•			•	•												•	•									900 x 900 x 2 150	420
ER 3509TP-C4	•			•			•		•		•	•			•				•	•												•	•									900 x 900 x 2 150	420
ER 3509P-C3	•			•			•	•			•	•				•			•	•												•	•									900 x 900 x 2 150	150
ER 3509P-C4	•			•			•	•			•	•			•				•	•												•	•									900 x 900 x 2 150	150
ER 3509PF-C3	•			•			•	•			•	•				•			•	•	•											•	•									900 x 900 x 2 150	150
ER 3509PF-C4	•			•			•	•			•	•			•				•	•	•											•	•									900 x 900 x 2 150	150
ER 3509TPF-C3	•			•			•		•		•	•				•			•	•	•											•	•									900 x 900 x 2 150	420
ER 3509TPF-C4	•			•			•		•		•	•			•				•	•	•											•	•									900 x 900 x 2 150	420
ER 3512TPR/L-C3	•				•		•		•		•	•				•			•	•												•	•									1 200 x 800 x 2 150	420
ER 3512TPR/L-C4	•				•		•		•		•	•			•				•	•												•	•									1 200 x 800 x 2 150	420
ER 3512PR/L-C3	•				•		•	•			•	•				•			•	•												•	•									1 200 x 800 x 2 150	150
ER 3512PR/L-C4	•				•		•	•			•	•			•				•	•												•	•									1 200 x 800 x 2 150	150
ER 3512TPFR/L-C3	•				•		•		•		•	•				•			•	•	•											•	•									1 200 x 800 x 2 150	420
ER 3512TPFR/L-C4	•				•		•		•		•	•			•				•	•	•											•	•									1 200 x 800 x 2 150	420
ER 3512PFR/L-C3	•				•		•	•			•	•				•			•	•	•											•	•									1 200 x 800 x 2 150	150
ER 3512PFR/L-C4	•				•		•	•			•	•			•				•	•	•											•	•									1 200 x 800 x 2 150	150
ER 4510TP-C3	•			•			•		•		•	•				•			•	•	•			•	•		•	•		•			•	•								1 000 x 1 000 x 2 150	420
ER 4510TP-C4	•			•			•		•		•	•			•				•	•	•			•	•		•	•		•			•	•								1 000 x 1 000 x 2 150	420
ER 4509TP-C3	•			•			•		•		•	•				•			•	•	•			•	•		•	•		•			•	•								900 x 900 x 2 150	420
ER 4509TP-C4	•			•			•		•		•	•			•				•	•	•			•	•		•	•		•			•	•								900 x 900 x 2 150	420
ER 4508TP-C3	•			•			•		•		•	•				•			•	•	•			•	•		•	•		•			•	•								800 x 800 x 2 150	420
ER 4508TP-C4	•			•			•		•		•	•			•				•	•	•			•	•		•	•		•			•	•								800 x 800 x 2 150	420
ER 4510P-C3	•			•			•	•			•	•				•			•	•	•			•	•		•	•		•			•	•								1 000 x 1 000 x 2 150	150
ER 4510P-C4	•			•			•	•			•	•			•				•	•	•			•	•		•	•		•			•	•								1 000 x 1 000 x 2 150	150
ER 4509P-C3	•			•			•	•			•	•				•			•	•	•			•	•		•	•		•			•	•								900 x 900 x 2 150	150
ER 4509P-C4	•			•			•	•			•	•			•				•	•	•			•	•		•	•		•			•	•								900 x 900 x 2 150	150
ER 4508P-C3	•			•			•	•			•	•				•			•	•	•			•	•		•	•		•			•	•								800 x 800 x 2 150	150
ER 4508P-C4	•			•			•	•			•	•			•				•	•	•			•	•		•	•		•			•	•								800 x 800 x 2 150	150
ER 4512TPL/R-C3	•				•		•		•		•	•				•			•	•	•			•	•		•	•		•			•	•							•	1 200 x 800 x 2 150	420
ER 4512TPL/R-C4	•				•		•		•		•	•			•				•	•	•			•	•		•	•		•			•	•							•	1 200 x 800 x 2 150	420
ER 4512PL/R-C3	•				•		•	•			•	•				•			•	•	•			•	•		•	•		•			•	•							•	1 200 x 800 x 2 150	150
ER 4512PL/R-C4	•				•		•	•			•	•			•				•	•	•			•	•		•	•		•			•	•							•	1 200 x 800 x 2 150	150
ER 4517TP-C3		•				•	•		•		•	•				•			•	•	•			•	•		•	•		•			•	•			•		•			1 680 x 800 x 2 150	520
ER 4517TP-C4		•				•	•		•		•	•			•				•	•	•			•	•		•	•		•			•	•			•		•			1 680 x 800 x 2 150	520
ER 4515TP-C3		•				•	•		•		•	•				•			•	•	•			•	•		•	•		•			•	•			•		•			1 480 x 800 x 2 150	520
ER 4515TP-C4		•				•	•		•		•	•			•				•	•	•			•	•		•	•		•			•	•			•		•			1 480 x 800 x 2 150	520
	ERLIT Elegance																																										
ER 05509-S2			•	•				•										•																								900 x 900 x 1 950	150
ER 05509-S3			•	•				•								•																										900 x 900 x 1 950	150
ER 05510-S2			•	•				•										•																								900 x 900 x 1 950	150
ER 05510-S3			•	•				•								•																										900 x 900 x 1 950	150
ER 5509TP-S2	•			•			•		•		•	•						•	•	•	•			•			•	•	•	•			•	•	•					•	•	900 x 900 x 2 150	430
ER 5509TP-S3	•			•			•		•		•	•				•			•	•	•			•			•	•	•	•			•	•	•					•	•	900 x 900 x 2 150	430
ER 5510TP-S2	•			•			•		•		•	•						•	•	•	•			•			•	•	•	•			•	•	•					•	•	1 000x 1 000 x 2 150	430
ER 5510TP-S3	•			•			•		•		•	•				•			•	•	•			•			•	•	•	•			•	•	•					•	•	1 000x 1 000 x 2 150	430
ER 5509P-S2	•			•			•	•			•	•						•	•	•	•			•			•	•	•	•			•	•	•					•	•	900 x 900 x 2 150	210
ER 5509P-S3	•			•			•	•			•	•				•			•	•	•			•			•	•	•	•			•	•	•					•	•	900 x 900 x 2 150	210
ER 5510P-S2	•			•			•	•			•	•						•	•	•	•			•			•	•	•	•			•	•	•					•	•	1 000x 1 000 x 2 150	210
ER 5510P-S3	•			•			•	•			•	•				•			•	•	•			•			•	•	•	•			•	•	•					•	•	1 000x 1 000 x 2 150	210
ER 5512TPL/R-S2	•				•		•		•		•	•						•	•	•	•			•			•	•	•	•			•	•	•					•	•	1 200 x 800 x 2 150	430
ER 5512TPL/R-S3	•				•		•		•		•	•				•			•	•	•			•			•	•	•	•			•	•	•					•	•	1 200 x 800 x 2 150	430
ER 5512PL/R-S2	•				•		•	•			•	•						•	•	•	•			•			•	•	•	•			•	•	•					•	•	1 200 x 800 x 2 150	210
ER 5512PL/R-S3	•				•		•	•			•	•				•			•	•	•			•			•	•	•	•			•	•	•					•	•	1 200 x 800 x 2 150	210
	ERLIT Premium																																										
ER NYC120L/R-W1	•					•	•	•			•			•			•		•	•	•			•		•	•	•	•	•	•	•					•	•		•		1 200 x 900 x 2 180	150
ER NYC120L/R-W2	•					•	•	•			•			•				•	•	•	•			•		•	•	•	•	•	•	•					•	•		•		1 200 x 900 x 2 180	150
ER NYC100-W1	•					•	•	•			•			•			•		•	•	•			•		•	•	•	•	•	•	•		•			•			•		1 000 x 1 050 x 2 180	150
ER NYC100-W2	•					•	•	•			•			•				•	•	•	•			•		•	•	•	•	•	•	•		•			•			•		1 000 x 1 050 x 2 180	150
ER MIA100-W1	•					•	•	•			•						•		•	•	•			•		•	•	•	•	•	•	•		•						•		1 000 x 1 080 x 2 180	150
ER MIA100-W2	•					•	•	•			•							•	•	•	•			•		•	•	•	•	•	•	•		•						•		1 000 x 1 080 x 2 180	150
ER MIA90-W1	•					•	•	•			•						•		•	•	•			•		•	•	•	•	•	•	•		•						•		900 x 980 x 2 180	150
ER MIA90-W2	•					•	•	•			•							•	•	•	•			•		•	•	•	•	•	•	•		•						•		900 x 980 x 2 180	150
ER SYD150-W1		•				•	•		•		•			•			•		•	•	•			•		•	•	•	•	•	•	•		•			•			•	•	1 480 x 820 x 2 200	560
ER SYD150-W2		•				•	•		•		•			•				•	•	•	•			•		•	•	•	•	•	•	•		•			•			•	•	1 480 x 820 x 2 200	560
ER SYD170-W1		•				•	•		•		•			•			•		•	•	•			•		•	•	•	•	•	•	•		•			•			•	•	1 670 x 900 x 2 200	560
ER SYD170-W2		•				•	•		•		•			•				•	•	•	•			•		•	•	•	•	•	•	•		•			•			•	•	1 670 x 900 x 2 200	560

Power voltage	220 VT ~ 10%, 50 Гц
Max current consumption	2 A
The internal supply voltage	12 VT
Water consumption	8-12 L/MIN
Pressure	0,2 - 0,4 Mpa
The maximum temperature feedwater	70 °C
The diameter of the inlet to the mixer	1/2"

CLARIFICATION

In order to give you better understanding of coded identification of ERLIT shower equipment we provide a detailed explanation table

1	2	3	4	5	6		7
ER	45	12	T	P	L	-	C3

1. Belonging to ERLIT Trade Mark
2. Line
3. Dimensions of shower rooms
4. High tray (absence of letter «T» in the model name means low tray)
5. Middle panel
6. Shower room direction
7. Glass

7. Glass:
C3 Back wall – white, doors – frosted
C4 Back wall – black, doors – toned
W1 Transparent glass
W2 Glass with décor Flower
S2 Glass with décor Wave
S3 Ice Glass

6. Shower room direction:
R right sided
L left sided